# COMPUTER SYSTEMS AND PLATFORM TECHNOLOGIES

## IT0047

FEU ALABANG FEU DILIMAN FEU TECH

*Technology Driven by Innovation*

MODULE 4

# The System Bus, Von Neuman Architecture & CPU Registers

**At the end of the lesson, the student should be able to :**

- Define Bus
- Identify types of Bus
- Identify the Memory Operations

MODULE 4.3

# CPU Registers and Flags

**At the end of the lesson, the student should be able to :**

- **Define Register**
- **Identify the different types of Registers**
- **Identify the values of the conditional flag registers**

# Registers

***Registers*** are high speed memory elements that resides inside the Central Processing Unit or CPU.

# CPU General Purpose Registers

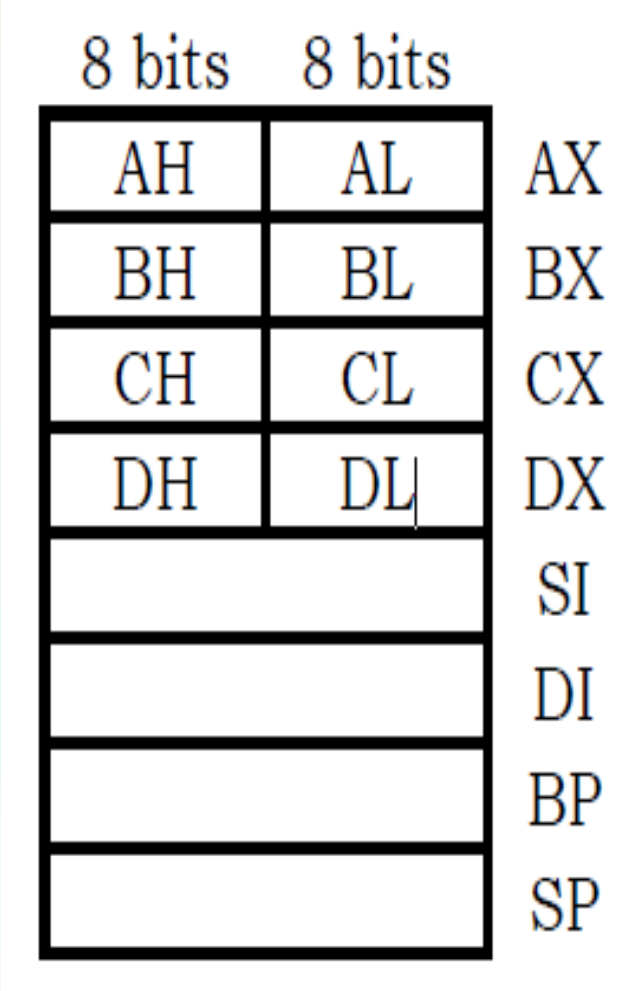


The **AX register (Accumulator) is where most arithmetic and logical computations take place.**

The **BX register (Base) has some special purposes as well. This is often used to hold base addresses of data located in the memory.**

The **CX register (Count), as its name implies, counts things. It is often use it to count off the number of iterations in a loop or specify the number of characters in a string.**

The **DX register (Data) has two special purposes: it holds the overflow from certain arithmetic operations, and it holds I/O addresses when accessing data on the 80x86 I/O bus.**

# CPU's 8 bit registers

| 8 bits | 8 bits | |
|---|---|---|
| AH | AL | AX |
| BH | BL | BX |
| CH | CL | CX |
| DH | DL | DX |
| | | SI |
| | | DI |
| | | BP |
| | | SP |

**AH**
**BH**
**CH**
**DH**

Higher Order byte registers

**AL**
**BL**
**CL**
**DL**

Lower Order byte registers

Eight 16-bit registers

# SEGMENT REGISTERS

## Four Special Segment Registers

- 16 bits wide registers deals with selecting blocks (segments) of main memory. A segment register points at the beginning of a segment in memory.

- **CS (Code Segment)**
- **DS (Data Segment)**
- **ES (Extra Segment)**
- **SS (Stack Segment)**

# Segment Registers

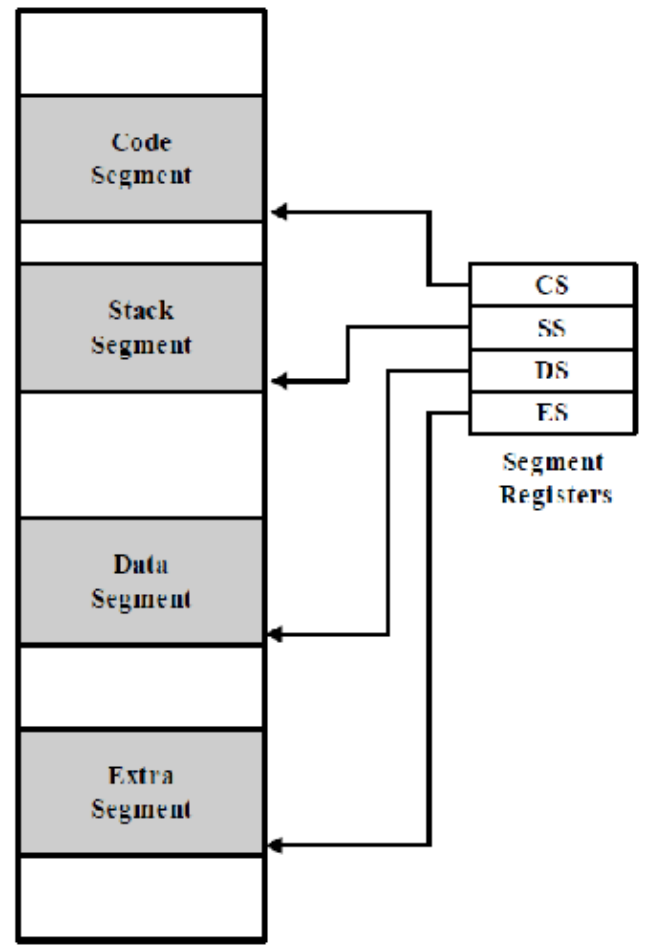

# Segment Registers

- ***Code Segment.*** This contains the program or code. The address of the next instruction executed by the 8086/8088 is generated by adding the contents of IP (offset address) to the contents of CS x 10H.

# Segment Registers

- ***Data Segment.*** This contains data referenced by almost all instructions and many addressing modes. Data are almost always moved into or out of MM via the data segment. The physical address of the data is generated by adding the contents of one of the index or pointer registers (BX, DI, or SI) to the contents of DS x 10H.
- Stack Segment. This is for the LIFO stack. The physical address is a combination of the contents stack pointer (SP) plus SS x 10H.
- Extra Segment. This is normally for string instructions. When a string instruction is executed, the destination location is addressed by the destination index register (DI) plus ES x 10H.

# Special Purpose Registers

**The instruction pointer (IP)**

is also the program counter, it contains the memory address of the instruction to be executed. During execution, the contents of the IP are updated to point to the next instruction.

**The flags register**

is an extensive collection of one bit values which help determine the current state of the processor. A 16 bits wide register, it uses only nine of those bits.

# Status Register

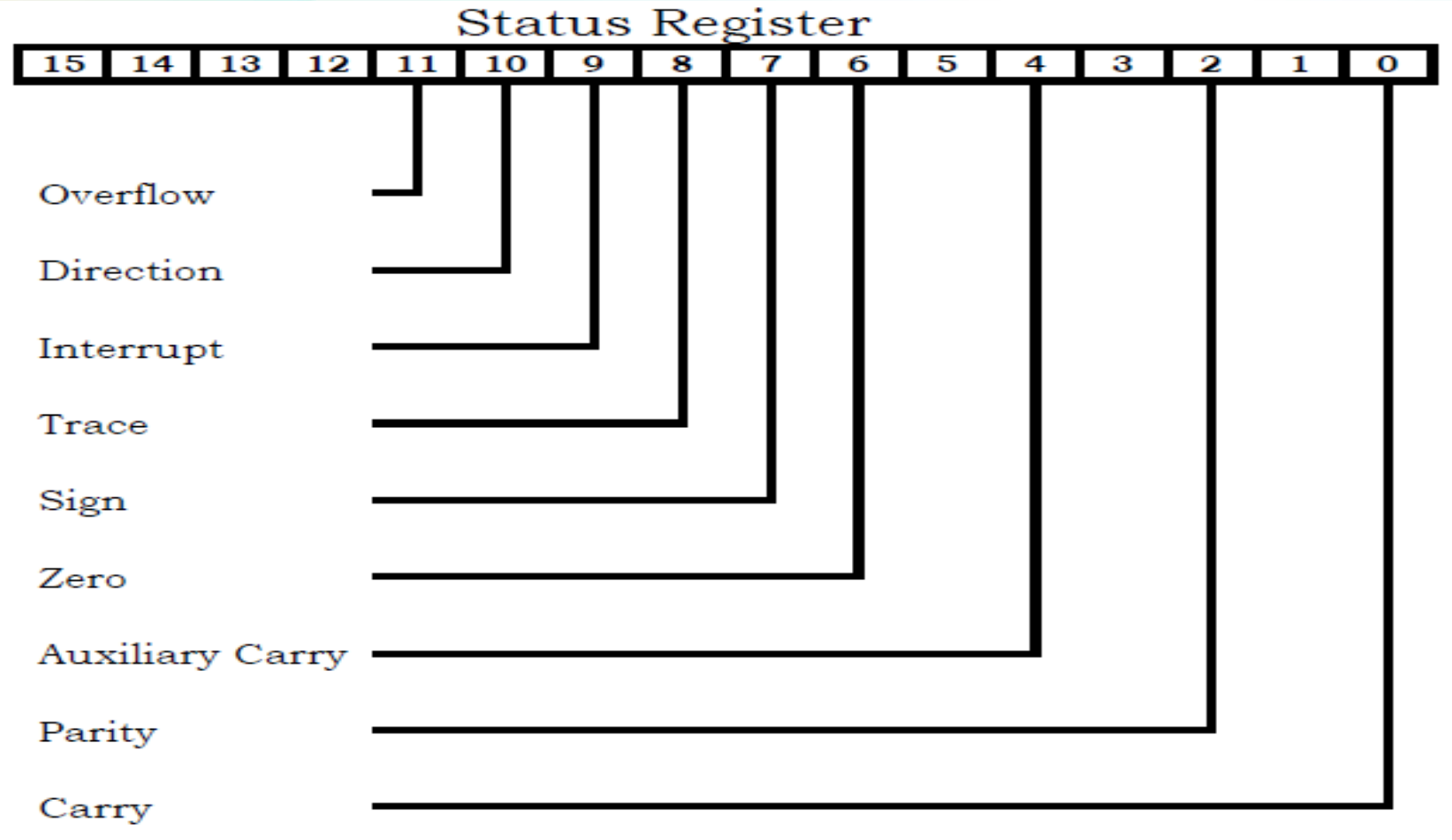

# Each bit in the flags register is a flag

**Conditional Flags** - reflect the result of the previous operation involving the ALU.

**Control Flags** - (they control the execution of special functions.

# The Conditional Flags

**Sign Flag (SF) - b7**

This is equal to the MSB of the result of the previous operation. 0 if positive, 1 if negative.

**Zero Flag (ZF) - b6**

This is set to 1 if the result of the previous operation is zero and 0 if the result is nonzero.

**Parity Flag (PF) - b2**

This is set to 1 if the low-order 8 bits of the result of the previous operation contain an even number of 1s. Otherwise it is reset to 0.

# The Conditional Flags

**Carry Flag (CF) - b0**

An addition causes this flag to be set to 1 if there is a carry out of the MSB, and a subtraction causes it to be set to 1 if a borrow is needed.

**Overflow Flag (OF) - b11**

This is set to 1 if an overflow occurs, i.e., a result is out of range. More specifically, for addition this flag is set to 1 when there is a carry into the MSB and no carry out of the MSB or vice-versa. For subtraction, it is set to 1, when the MSB needs a borrow and there is no borrow from the MSB, or vice-versa.

# The Conditional Flags

**Auxiliary Carry Flag (AF) – b4**

This flag is used exclusively for BCD arithmetic. It is set to 1 if there is a carry out of bit 3 (b3) during an addition or a borrow by bit 3 during a subtraction.

# The Control Flags

**Direction Flag (DF) - b10**

This flag is used by string manipulation instructions. If clear, the string is processed from its beginning with the first element having the lowest address. Otherwise, the string is processed from the high address towards the low address.

**Interrupt Enable Flag (IF) - b9**

If set, a certain type of interrupt (a maskable interrupt) can be recognized by the CPU; otherwise, these interrupts are ignored.

# The Control Flags

- Trap Flag (TF) - b8
  - If set, the 8086/8088 will enter into a single-step mode. In this mode, the CPU executes one instruction at a time.

# 80286 Registers

There are three additional bits present in the 80286 flags register. The I/O Privilege Level is a two bit value (bits 12 and 13). It specifies one of four different privilege levels necessary to perform I/O operations. These two bits generally contain 00 when operating in ***real mode*** on the 80286 (the 8086 emulation mode). The NT (***nested task***) flag controls the operation of an interrupt return (IRET) instruction. NT is normally zero for real-mode programs. The ***protected mode*** on the 80286 is to access more than one megabyte of RAM.

# 80286 Registers

80286 also has five additional registers used by an operating system to support memory management and multiple processes: the machine status word (***msw***), the global descriptor table register (***gdtr***), the local descriptor table register (***ldtr***), the interrupt descriptor table register (***idtr***) and the task register (***tr***).

# 80386/80486 Registers

The 80386 calls these new 32-bit versions **EAX**, **EBX**, **ECX**, **EDX**, **ESI**, **EDI**, **EBP**, **ESP**, **EFLAGS**, and **EIP** to differentiate them from their 16-bit versions (which are still available on the 80386).

Besides the 32-bit registers, the 80386 also provides two new 16-bit segment registers, **FS** and **GS**, which allow the programmer to concurrently access six different segments in memory.

# 80386/80486 Registers

The 80386 did not make any changes to the bits in the flags register. Instead, it extended the flags register to 32 bits (the “EFLAGS” register) and defined bits 16 and 17.

Bit 16 is the debug resume flag (**RF**) used with the set of 80386 debug registers.

Bit 17 is the Virtual 8086 mode flag (**VM**) which determines whether the processor is operating in virtual-86 mode (which simulates an 8086) or standard protected mode.

# 80386/80486 Registers

The 80486 adds a third bit to the EFLAGS register at bit 18 – the alignment check flag (**ACF**). Along with control register zero (**CR0**) on the 80486, this flag forces a trap (program abort) whenever the processor accesses non-aligned data.
The 80386 added four control registers: **CR0-CR3**. These registers extend the msw register of the 80286. On the 80386 and 80486 these registers control functions such as paged memory management, cache enable /disable operation (80486 only), protected mode operation, and more.

.

# Q&A SESSION

**ASK ANY QUESTION RELATED TO OUR TOPIC FOR TODAY.**
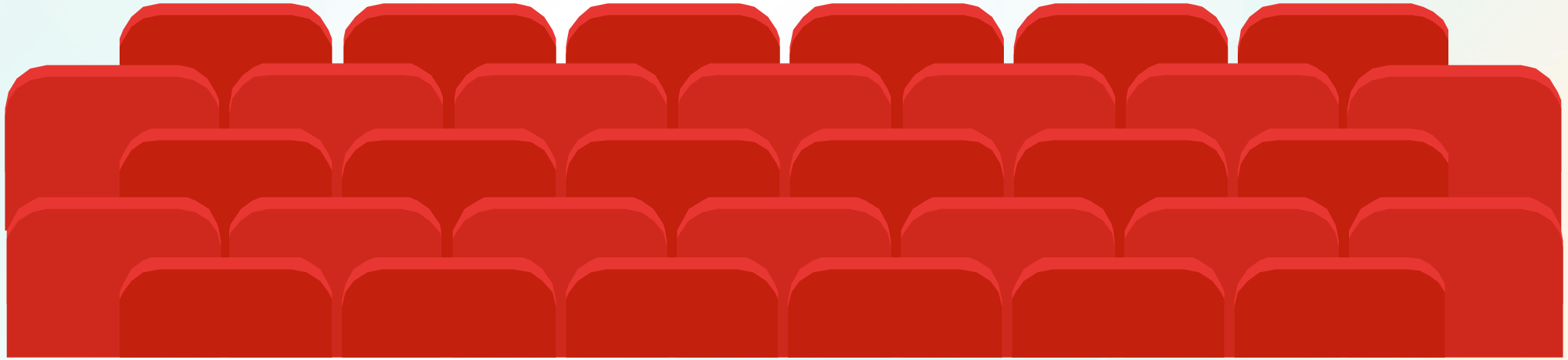
# THANK YOU